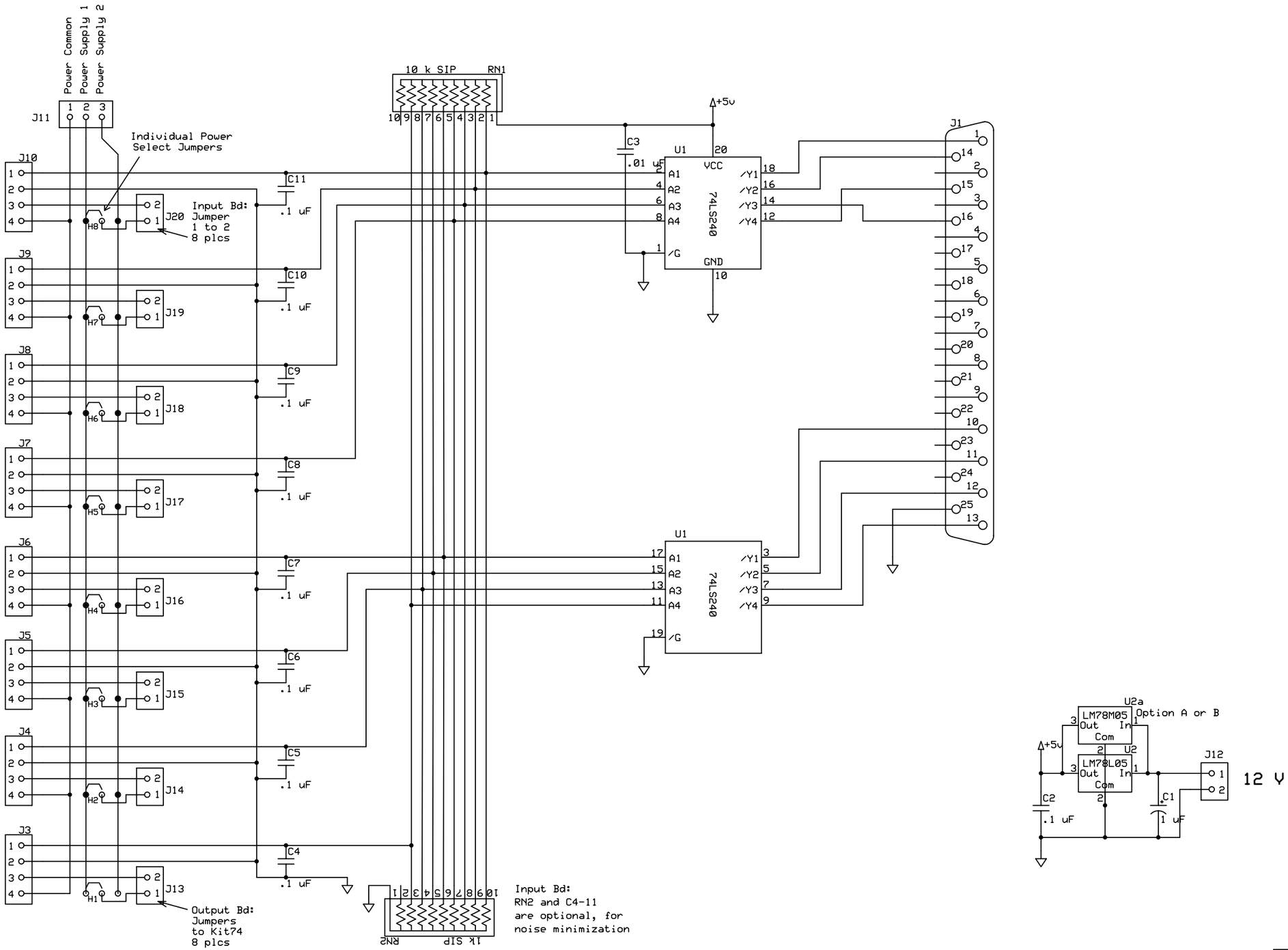

PLCC Controller		
Connectors, Input Buffers		
Dave Bell	Rev 1.0 4/24/2008	Sheet 1